Cambridge International AS & A Level

Cambridge International Examinations
Cambridge International Advanced Subsidiary and Advanced Level

PHYSICS **9702/13**

Paper 1 Multiple Choice **October/November 2014**

1 hour

Additional Materials: Multiple Choice Answer Sheet
Soft clean eraser
Soft pencil (type B or HB is recommended)

* 2 9 4 4 9 6 2 3 7 8 *

READ THESE INSTRUCTIONS FIRST

Write in soft pencil.
Do not use staples, paper clips, glue or correction fluid.
Write your name, Centre number and candidate number on the Answer Sheet in the spaces provided unless this has been done for you.
DO **NOT** WRITE IN ANY BARCODES.

There are **forty** questions on this paper. Answer **all** questions. For each question there are four possible answers **A**, **B**, **C** and **D**.
Choose the **one** you consider correct and record your choice in **soft pencil** on the separate Answer Sheet.

Read the instructions on the Answer Sheet very carefully.

Each correct answer will score one mark. A mark will not be deducted for a wrong answer.
Any working should be done in this booklet.
Electronic calculators may be used.

IB14 11_9702_13/3RP
© UCLES 2014

Data

speed of light in free space, $c = 3.00 \times 10^{8}\,\text{m s}^{-1}$

permeability of free space, $\mu_0 = 4\pi \times 10^{-7}\,\text{H m}^{-1}$

permittivity of free space, $\varepsilon_0 = 8.85 \times 10^{-12}\,\text{F m}^{-1}$

$\left(\dfrac{1}{4\pi\varepsilon_0} = 8.99 \times 10^{9}\,\text{m F}^{-1}\right)$

elementary charge, $e = 1.60 \times 10^{-19}\,\text{C}$

the Planck constant, $h = 6.63 \times 10^{-34}\,\text{J s}$

unified atomic mass constant, $u = 1.66 \times 10^{-27}\,\text{kg}$

rest mass of electron, $m_\text{e} = 9.11 \times 10^{-31}\,\text{kg}$

rest mass of proton, $m_\text{p} = 1.67 \times 10^{-27}\,\text{kg}$

molar gas constant, $R = 8.31\,\text{J K}^{-1}\,\text{mol}^{-1}$

the Avogadro constant, $N_\text{A} = 6.02 \times 10^{23}\,\text{mol}^{-1}$

the Boltzmann constant, $k = 1.38 \times 10^{-23}\,\text{J K}^{-1}$

gravitational constant, $G = 6.67 \times 10^{-11}\,\text{N m}^2\,\text{kg}^{-2}$

acceleration of free fall, $g = 9.81\,\text{m s}^{-2}$

© UCLES 2014

Formulae

uniformly accelerated motion, $s = ut + \frac{1}{2}at^2$

$v^2 = u^2 + 2as$

work done on/by a gas, $W = p\Delta V$

gravitational potential, $\phi = -\frac{Gm}{r}$

hydrostatic pressure, $p = \rho gh$

pressure of an ideal gas, $p = \frac{1}{3}\frac{Nm}{V}\langle c^2 \rangle$

simple harmonic motion, $a = -\omega^2 x$

velocity of particle in s.h.m., $v = v_0 \cos \omega t$

$v = \pm \omega \sqrt{(x_0^2 - x^2)}$

electric potential, $V = \frac{Q}{4\pi\varepsilon_0 r}$

capacitors in series, $1/C = 1/C_1 + 1/C_2 + \ldots$

capacitors in parallel, $C = C_1 + C_2 + \ldots$

energy of charged capacitor, $W = \frac{1}{2}QV$

resistors in series, $R = R_1 + R_2 + \ldots$

resistors in parallel, $1/R = 1/R_1 + 1/R_2 + \ldots$

alternating current/voltage, $x = x_0 \sin \omega t$

radioactive decay, $x = x_0 \exp(-\lambda t)$

decay constant, $\lambda = \frac{0.693}{t_{\frac{1}{2}}}$

© UCLES 2014

1 When the brakes are applied on a vehicle moving at speed v, the distance d moved by the vehicle in coming to rest is given by the expression

$$d = kv^2$$

where k is a constant.

What is the unit of k expressed in SI base units?

A $m^{-1}s^2$ **B** ms^{-2} **C** m^2s^{-2} **D** $m^{-1}s$

2 Which list contains one vector quantity and two scalar quantities?

A displacement, weight, velocity

B force, acceleration, time

C momentum, mass, speed

D work, density, energy

Space for working

© UCLES 2014

3 In the circuit shown, an analogue ammeter is to be recalibrated as a thermometer. The graph shows how the resistance R of the thermistor changes with temperature T.

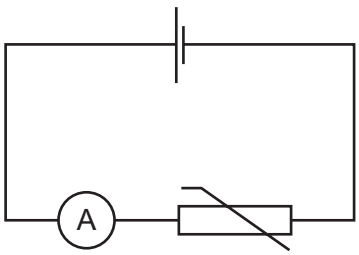

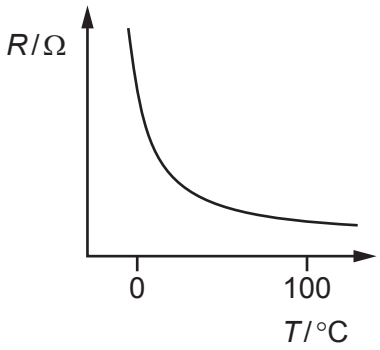

Which diagram could represent the temperature scale on the ammeter?

A

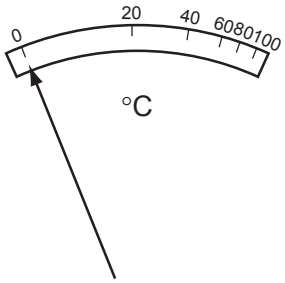

B

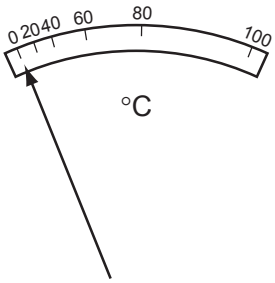

C

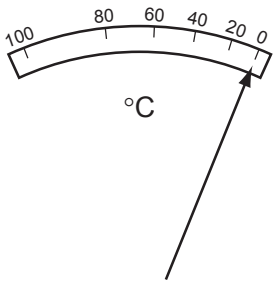

D

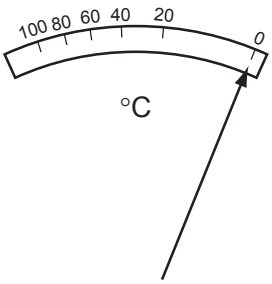

Space for working

4 The diagram shows part of a thermometer.

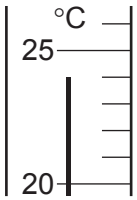

What is the correct reading on the thermometer and the uncertainty in this reading?

	reading / °C	uncertainty in reading / °C
A	24	±1
B	24	±0.5
C	24	±0.2
D	24.0	±0.5

5 The resistance R of a resistor is to be determined. The current I in the resistor and the potential difference V across it are measured.

The results, with their uncertainties, are

$$I = (2.0 \pm 0.2)\,\text{A} \qquad V = (15.0 \pm 0.5)\,\text{V}.$$

The value of R is calculated to be $7.5\,\Omega$.

What is the uncertainty in this value for R?

A $\pm 0.3\,\Omega$ **B** $\pm 0.5\,\Omega$ **C** $\pm 0.7\,\Omega$ **D** $\pm 1\,\Omega$

Space for working

© UCLES 2014

6 In an experiment to determine the acceleration of free fall g, a ball-bearing is held by an electromagnet. When the current to the electromagnet is switched off, a clock starts and the ball-bearing falls. After falling a distance h, the ball-bearing strikes a switch to stop the clock which measures the time t of the fall.

Which expression can be used to calculate the value of g?

A $\frac{ht^2}{2}$ **B** $\frac{th^2}{2}$ **C** $\sqrt{\frac{2t}{h^2}}$ **D** $\frac{2h}{t^2}$

7 The diagram shows a velocity-time graph for a mass moving up and down on the end of a spring.

Which point represents the velocity of the mass when at the lowest point of its motion?

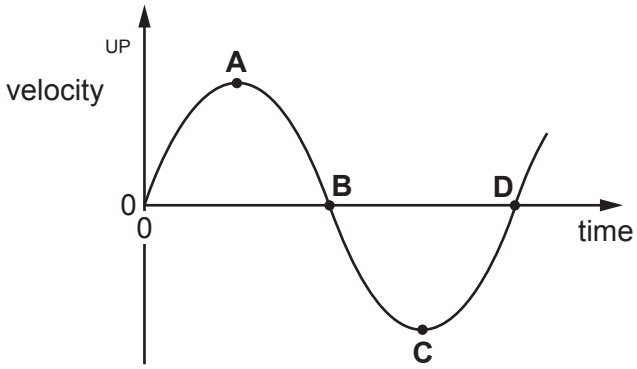

Space for working

8 A ball is released from rest on a smooth slope XY.

It moves down the slope, along a smooth horizontal surface YZ and rebounds inelastically at Z. Then it moves back to Y and comes to rest momentarily somewhere on XY.

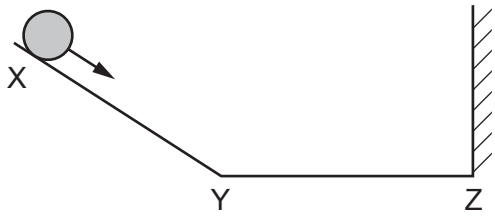

Which velocity-time graph represents the motion of the ball?

A

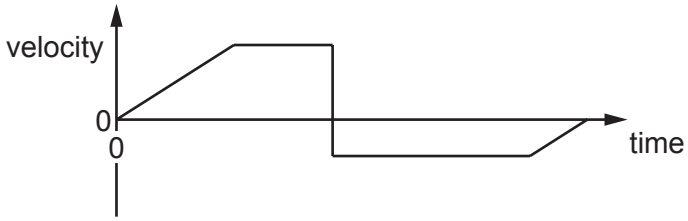

B

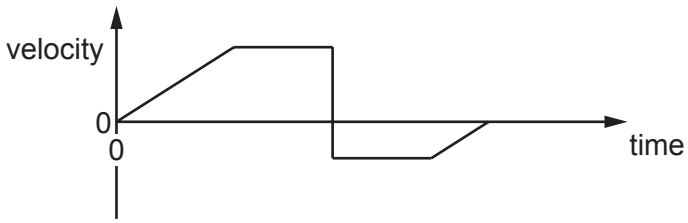

C

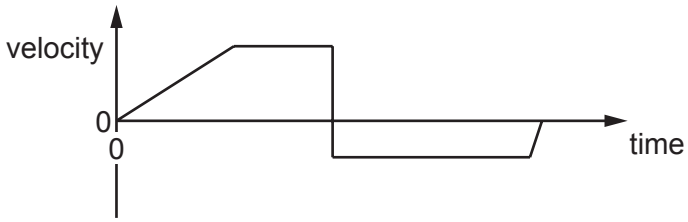

D

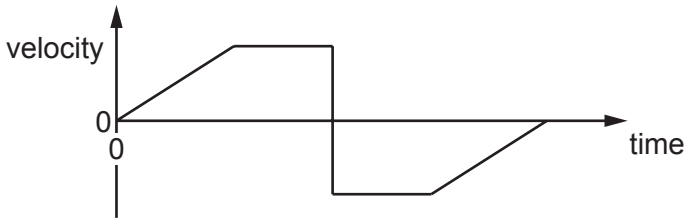

Space for working

9 A man weighs 240 N on Mars where the acceleration of free fall g is $4\,m\,s^{-2}$. On the Moon, g is $2\,m\,s^{-2}$.

Which statement is correct?

A The man has a mass on Mars of 60 N.

B The man has a mass on the Moon of 120 kg.

C The man weighs 120 N on the Moon.

D The man weighs 240 N on the Moon.

10 A body experiences a varying resultant force that causes its momentum to vary, as shown in the graph.

At which point does the resultant force have the largest value?

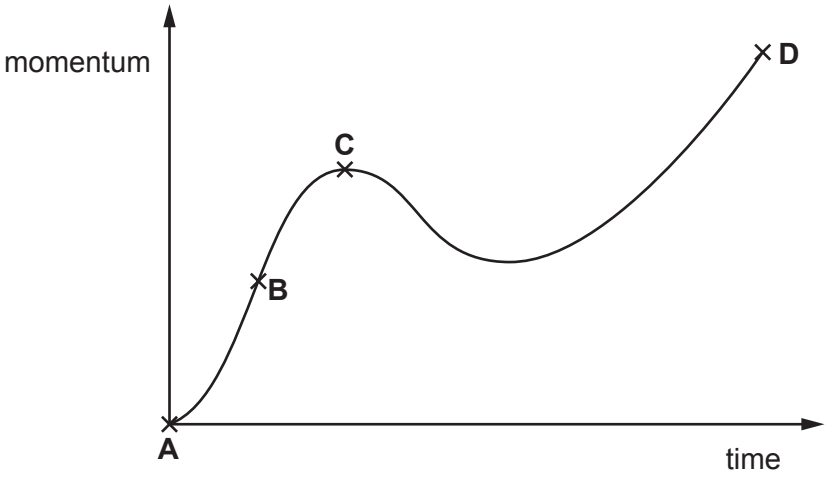

Space for working

11 A golf ball of mass m is dropped onto a hard surface from a height h_1 and rebounds to a height h_2.

The momentum of the golf ball just as it reaches the surface is different from its momentum just as it leaves the surface.

What is the total change in the momentum of the golf ball between these two instants? (Ignore air resistance.)

A $m\sqrt{2gh_1} - m\sqrt{2gh_2}$

B $m\sqrt{2gh_1} + m\sqrt{2gh_2}$

C $m\sqrt{2g(h_1 - h_2)}$

D $m\sqrt{2g(h_1 + h_2)}$

12 A sealed cylindrical steel can is situated below the surface of water.

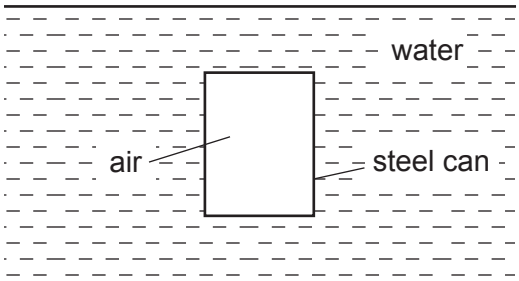

What is the origin of the upthrust that acts on the can?

A The air pressure in the can is less than the water pressure outside the can.

B The average density of the air and steel is less than the density of water.

C The water pressure on the bottom of the can is greater than the water pressure on the top.

D The weight of displaced water acts upwards on the can.

Space for working

© UCLES 2014

13 A cylinder of weight W is placed on a smooth slope. The contact force of the slope on the cylinder is R. A thread is attached to the surface of the cylinder. The other end of the thread is fixed.

Which diagram shows the cylinder in equilibrium?

A

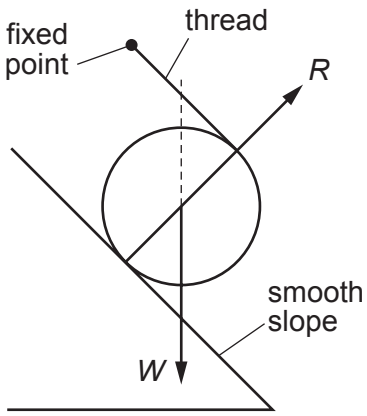

B

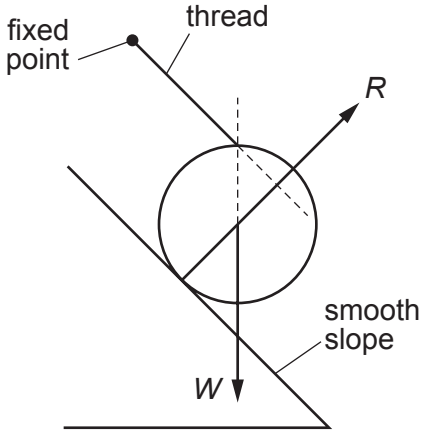

C

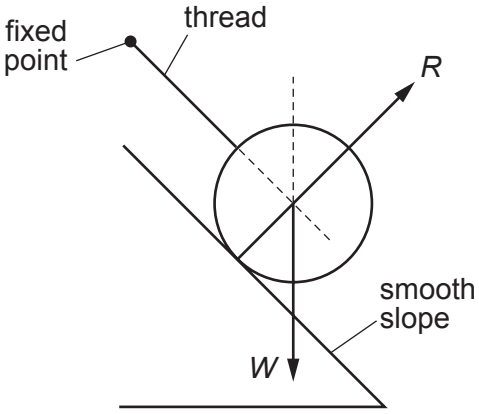

D

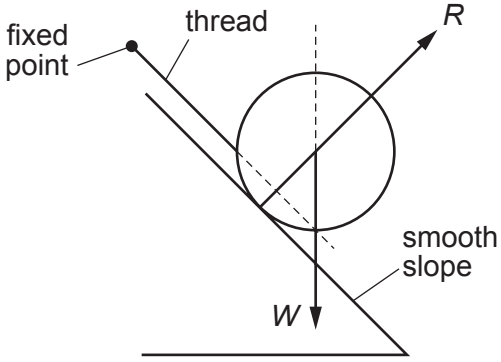

Space for working

14 A uniform metre rule of mass 100 g is supported by a pivot at the 40 cm mark and a string at the 100 cm mark. The string passes round a frictionless pulley and carries a mass of 20 g as shown in the diagram.

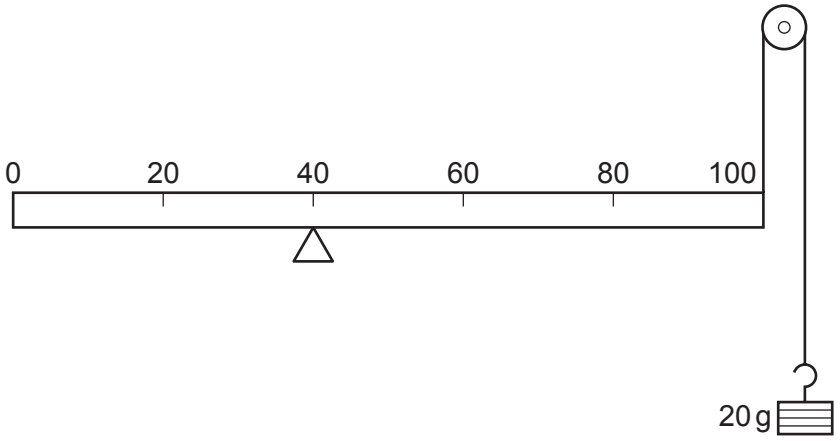

At which mark on the rule must a 50 g mass be suspended so that the rule balances?

A 4 cm **B** 36 cm **C** 44 cm **D** 64 cm

15 A constant force F, acting on a car of mass m, moves the car up a slope through a distance s at constant velocity v. The angle of the slope to the horizontal is α.

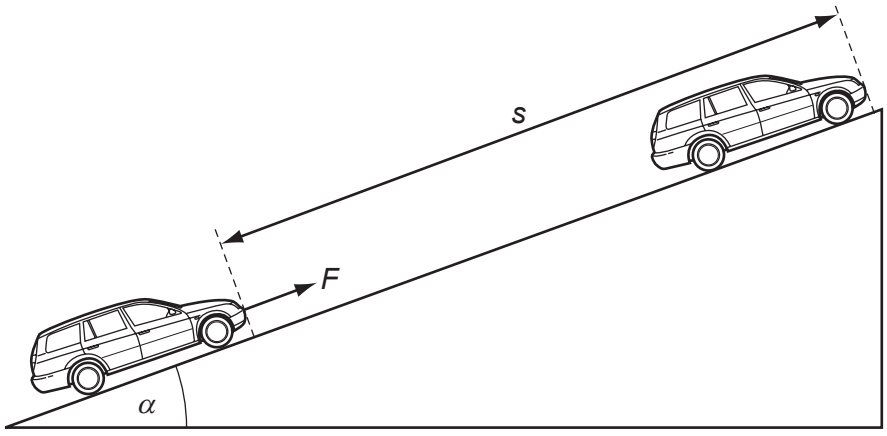

Which expression gives the efficiency of the process?

A $\frac{mgs\sin\alpha}{Fv}$ **B** $\frac{mv}{Fs}$ **C** $\frac{mv^2}{2Fs}$ **D** $\frac{mg\sin\alpha}{F}$

Space for working

16 The diagram shows a particle X, with kinetic energy E_k, about to collide with a stationary particle Y. Both particles have the same mass.



After colliding, X and Y travel onwards together as a single larger particle.

How much kinetic energy is lost in the collision?

A 0 **B** $\frac{E_k}{4}$ **C** $\frac{E_k}{2}$ **D** $\frac{3E_k}{4}$

17 A box of weight 30 N is released from rest on a ramp that is at an angle of 30° to the horizontal. The box slides down the ramp so that it falls through a vertical distance of 8.0 m. A constant frictional force of 10 N acts on the box while it is moving.

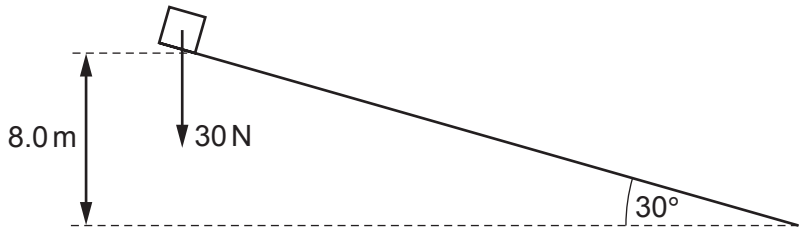

What is the kinetic energy of the box after falling through this distance?

A 80 J **B** 160 J **C** 240 J **D** 400 J

Space for working

18 A positive charge experiences a force *F* when placed at point X in a uniform electric field.

The charge is then moved from point X to point Y.

Distances *r* and *s* are shown on the diagram.

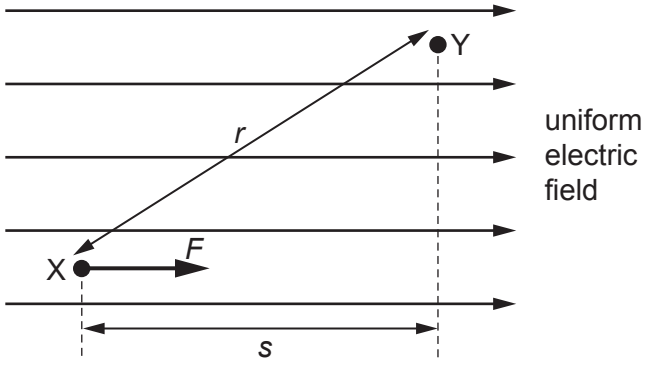

What is the change in the potential energy of the charge?

A decreases by *Fs*

B increases by *Fs*

C decreases by *Fr*

D increases by *Fr*

Space for working

19 A van driver adjusts the force on a van's brakes so that the van travels at constant speed down a hill from P to Q.

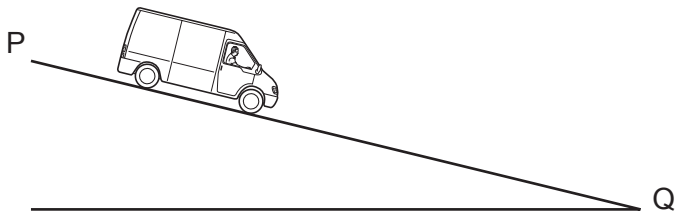

The magnitude of the change in the van's kinetic energy is ΔE_k. The magnitude of the change in its gravitational potential energy is ΔE_p.

Which statement is correct?

A $\Delta E_k > \Delta E_p$

B $\Delta E_k = \Delta E_p$

C $\Delta E_p > \Delta E_k > 0$

D $\Delta E_k = 0$

20 Atmospheric pressure at sea level has a value of 100 kPa.
The density of sea water is 1020 kg m^{-3}.

At which depth in the sea would the total pressure be 110 kPa?

A 1.0 m **B** 9.8 m **C** 10 m **D** 11 m

Space for working

© UCLES 2014

21 A student is studying Brownian motion.

Using a microscope, she observes particles of smoke in a glass container, illuminated by a strong light. The particles of smoke have a zig-zag path, constantly changing speed and direction.

What happens to the smoke particles if the air in the container is heated?

A The smoke particles become easier to see.

B The smoke particles change direction more frequently.

C The smoke particles increase in volume.

D The smoke particles move further apart.

22 The diagram shows two liquids, labelled P and Q, which do **not** mix. The liquids are in equilibrium in an open U-tube.

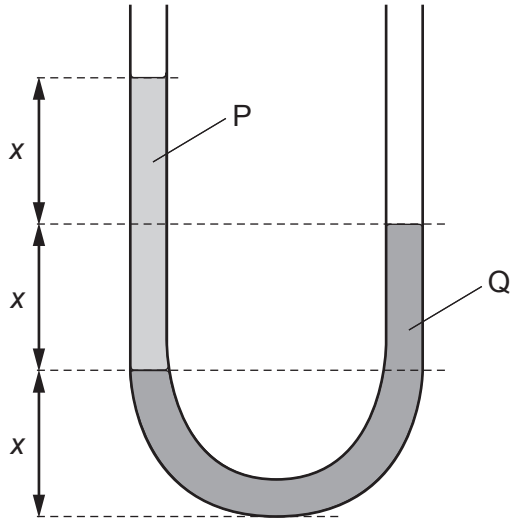

What is the ratio $\frac{\text{density of P}}{\text{density of Q}}$?

A $\frac{1}{2}$ **B** $\frac{2}{3}$ **C** $\frac{3}{2}$ **D** 2

Space for working

23 What is meant by the ultimate tensile stress of a material?

A the maximum force that can be applied to a bar of the material before it bends

B the maximum inter-atomic force before the atomic bonds of the material break

C the maximum stretching force per unit cross-sectional area before the material breaks

D the maximum tensile force in a wire of the material before it breaks

24 The graph shows the behaviour of a sample of a metal when it is stretched until it starts to undergo plastic deformation.

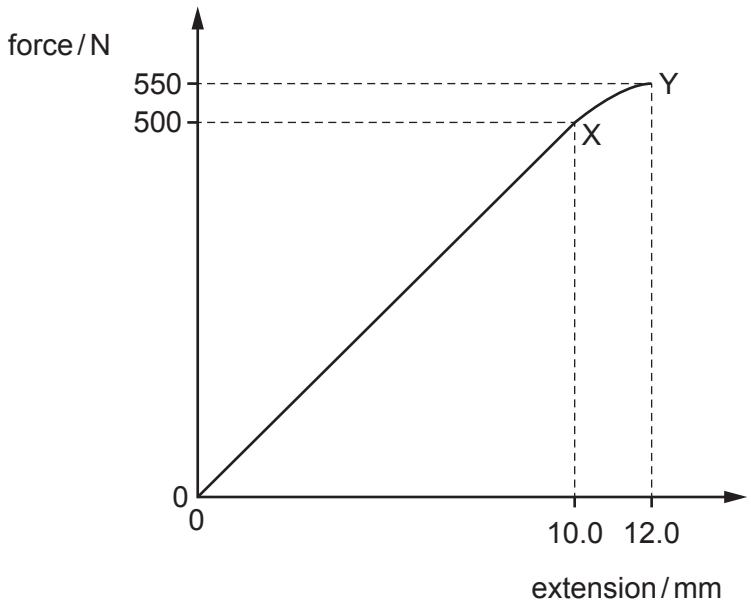

What is the total work done in stretching the sample from zero to 12.0 mm extension?
Simplify the calculation by treating the curve XY as a straight line.

A 3.30 J **B** 3.55 J **C** 3.60 J **D** 6.60 J

Space for working

25 Two springs, one with spring constant $k_1 = 4\,\text{kN m}^{-1}$ and the other with spring constant $k_2 = 2\,\text{kN m}^{-1}$, are connected as shown.

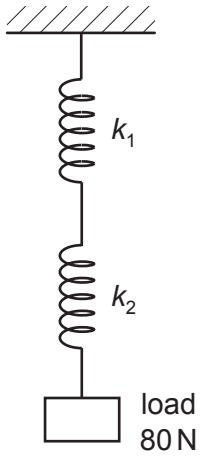

What is the total extension of the springs when supporting a load of 80 N?

A 1.3 cm **B** 4 cm **C** 6 cm **D** 60 cm

26 Which statement about waves is correct?

A All electromagnetic waves travel at the same speed in a vacuum.

B Longitudinal waves can be polarised.

C The amplitude of a wave is directly proportional to the energy transferred by the wave.

D The frequency of infra-red light is greater than the frequency of ultra-violet light.

Space for working

© UCLES 2014

27 The variation with distance x of the intensity I along a stationary sound wave in air is shown by the following graph.

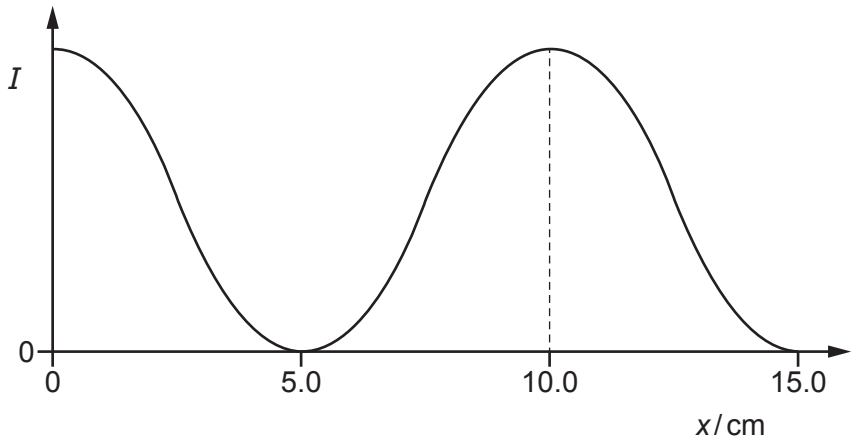

The speed of sound in air is $340\,m\,s^{-1}$.

What is the frequency of the sound wave?

A 1700 Hz **B** 2270 Hz **C** 3400 Hz **D** 6800 Hz

28 Plane wavefronts in a ripple tank pass through a gap as shown.

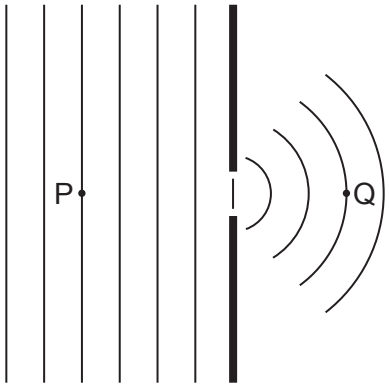

Which property of the wave will be different at Q compared with P?

A velocity

B frequency

C amplitude

D wavelength

Space for working

29 An organ pipe of length l is open at both ends. Notes are produced by the pipe when stationary waves are set up.

The speed of sound in the air column is v.

What is the lowest (fundamental) frequency of the note produced by the pipe?

A $\frac{2v}{l}$ **B** $\frac{v}{l}$ **C** $\frac{v}{2l}$ **D** $\frac{v}{4l}$

30 Interference fringes are produced on a screen by double-slit interference using light of wavelength 600 nm. The fringe separation is 4.0 mm and the separation of the slits is 0.60 mm.

What is the distance between the double slit and the screen?

A 0.25 m **B** 0.40 m **C** 2.5 m **D** 4.0 m

Space for working

© UCLES 2014

31 Regions of unbalanced charge are produced inside a cloud as shown.



For the region X, which diagram correctly represents the direction of the electric field and the initial direction in which electrons would move?

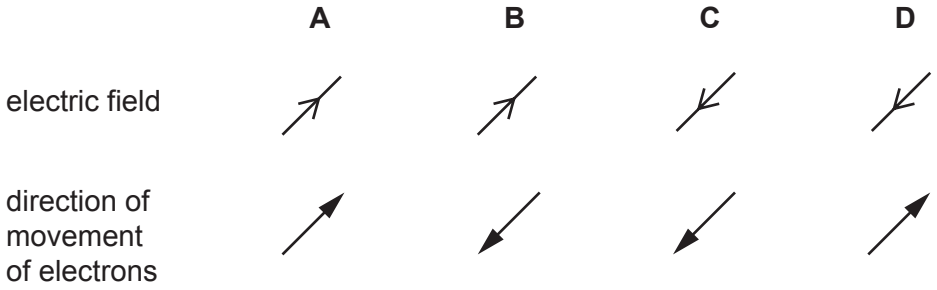

32 The path of an electron with initial speed v in the uniform electric field between two parallel plates is shown.

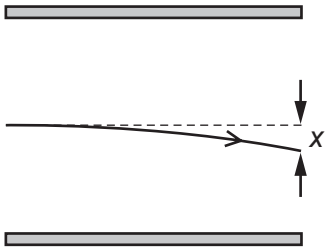

The vertical deflection x is measured at the right-hand edge of the plates.

The distance between the plates is halved. The potential difference between the plates remains the same.

What will be the new deflection of the electron with the same initial speed v?

A x **B** $\sqrt{2}x$ **C** $2x$ **D** $4x$

Space for working

© UCLES 2014

33 A metal wire of length 0.50 m has a resistance of 12 Ω.

What is the resistance of a wire of length 2.0 m and made of the same material, but with half the diameter?

A 12 Ω **B** 48 Ω **C** 96 Ω **D** 192 Ω

34 A student found two unmarked resistors. To determine the resistance of the resistors, the circuit below was set up. The resistors were connected in turn between P and Q, noting the current readings. The voltage readings were noted without the resistors and with each resistor in turn.

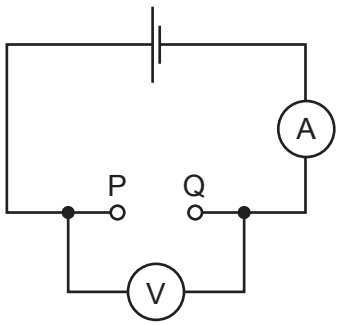

The results were entered into a spreadsheet as shown.

1.5	1.3	28	46
1.5	1.4	14	100

The student forgot to enter the column headings.

Which order of the headings would be correct?

A	e.m.f. / V	V / V	R / Ω	I / mA
B	V / V	e.m.f. / V	R / Ω	I / mA
C	V / V	e.m.f. / V	I / mA	R / Ω
D	e.m.f. / V	V / V	I / mA	R / Ω

Space for working

© UCLES 2014

35 A potential divider consists of resistors of resistance R_1 and R_2 connected in series across a source of potential difference V_0. The potential difference across R_1 is V_{out}.

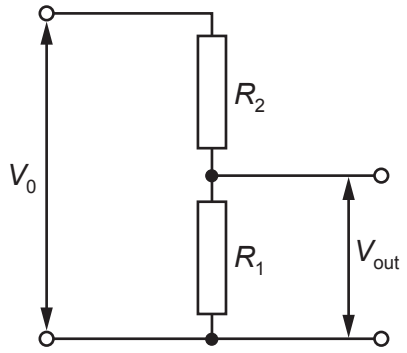

Which changes to R_1 and R_2 will increase the value of V_{out}?

	R_1	R_2
A	doubled	doubled
B	doubled	halved
C	halved	doubled
D	halved	halved

36 An extension lead is used to connect a 240 V electrical supply to a heater as shown.

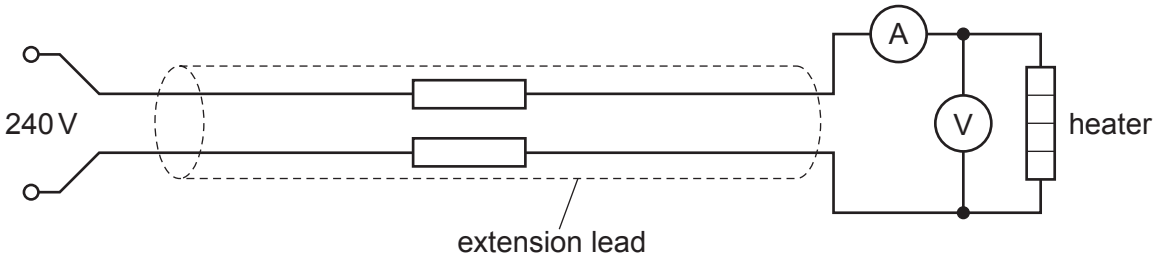

A voltmeter measures the potential difference (p.d.) across the heater as 216 V and an ammeter measures the current through the heater as 7.7 A.

What is the total resistance of the extension lead?

A 3.1 Ω **B** 6.2 Ω **C** 28 Ω **D** 31 Ω

Space for working

37 In the circuit shown, the ammeters have negligible resistance and the voltmeters have infinite resistance.

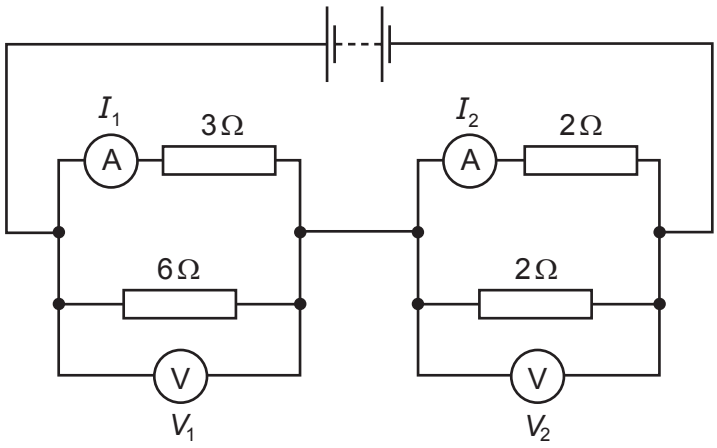

The readings on the meters are I_1, I_2, V_1 and V_2, as labelled on the diagram.

Which statement is correct?

A $I_1 > I_2$ and $V_1 > V_2$

B $I_1 > I_2$ and $V_1 < V_2$

C $I_1 < I_2$ and $V_1 > V_2$

D $I_1 < I_2$ and $V_1 < V_2$

Space for working

38 The nucleus of a radioactive isotope of an element emits an alpha particle. The daughter nucleus then emits a beta particle and then the daughter nucleus of that reaction emits another beta particle.

Which statement describes the final nuclide that is formed?

A It is a different isotope of the original element.

B It is a nuclide of a different element of higher proton number.

C It is a nuclide of the same element but with different proton number.

D It is identical to the original nuclide.

39 A nuclear reaction is shown.

$$^{238}_{92}\mathrm{U} + {}^{4}_{2}\mathrm{He} \rightarrow {}^{241}_{94}\mathrm{Pu} + \mathrm{X}$$

What is product X?

A an alpha particle

B an electron

C a neutron

D a proton

Space for working

40 Alpha, beta and gamma radiations

1 are absorbed to different extents in solids,

2 behave differently in an electric field,

3 behave differently in a magnetic field.

The diagrams illustrate these behaviours.

diagram 1

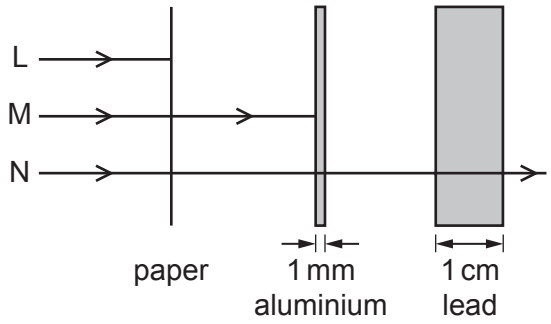

diagram 2

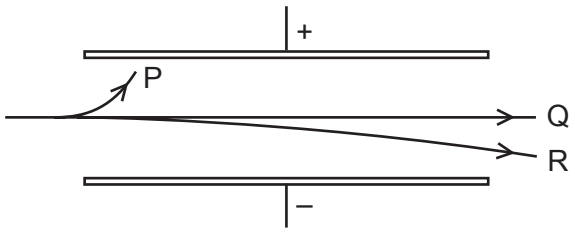

diagram 3

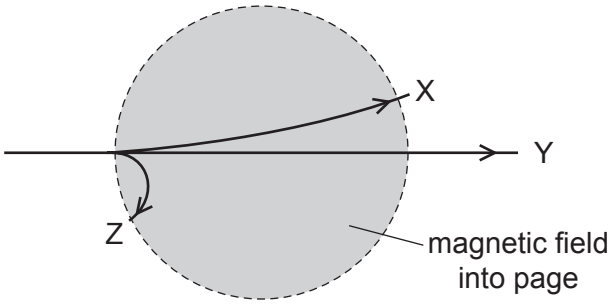

Which three labels on these diagrams refer to the **same** kind of radiation?

A L, P, X **B** L, P, Z **C** M, P, Z **D** N, Q, X

Space for working

BLANK PAGE

BLANK PAGE

Permission to reproduce items where third-party owned material protected by copyright is included has been sought and cleared where possible. Every reasonable effort has been made by the publisher (UCLES) to trace copyright holders, but if any items requiring clearance have unwittingly been included, the publisher will be pleased to make amends at the earliest possible opportunity.

Cambridge International Examinations is part of the Cambridge Assessment Group. Cambridge Assessment is the brand name of University of Cambridge Local Examinations Syndicate (UCLES), which is itself a department of the University of Cambridge.